CREALITY

3DPrintMill

Ingenious, Infinite and Incredible

The ultimate revolutionary 3D printer

- Batch Print
- Infinite-Z-axis Printing
- Stable and Durable Operation

Smart 3D Printer Pioneer

Batch Print

Infinite-Z-axis Printing

Dual-gear Metal Extruder

Stable Core-XY Structure

Rolling Conveyor-belt

Exclusive Slice Software

Smart Filament Detector

Ultra-silent Motherboard

Infinite-Z-axis for Endless Printing

Equipped with the rolling conveyor-belt, it realizes continuous printing of duplicate models. No worries to print the infinite length model. High productivity, time-saving and cost-efficient.

200 × 170 × ∞ mm

Print dimension:

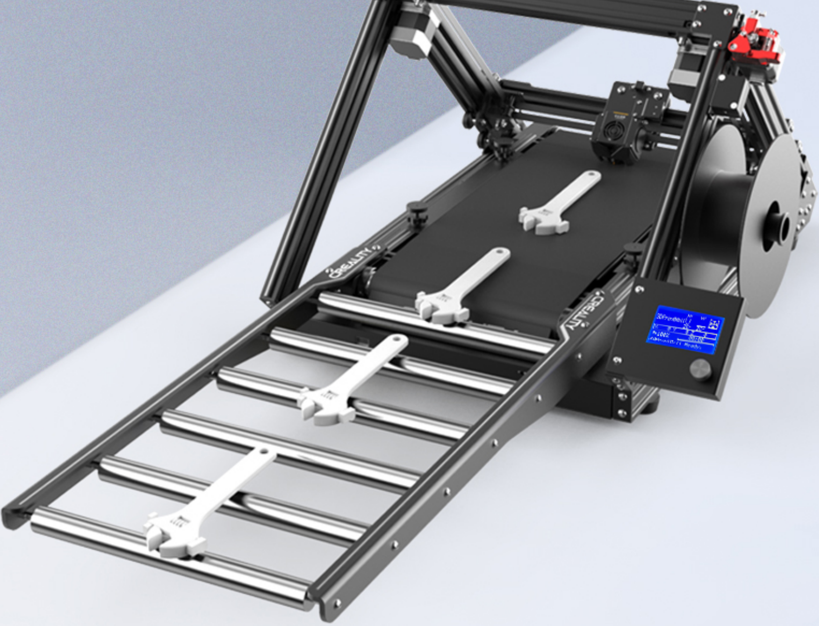

*A removable extension bracket is available for installing to prevent the model from falling during printing(Optional)

A Desktop Size 3D printer Easy to Achieve the Batch Print

3DPrintMill is a revolutionary creative product, which breaks through the traditional gantry structure. It can easily achieve batch print with a desktop size.

535 × 656 × 410 mm

Machine Dimension:

3D
printing

Dual–gear Metal Extruder

High-quality dual-gear metal extruder, combined with the 45 degrees slanting nozzle turns more than 200 hours of continuous printing into reality

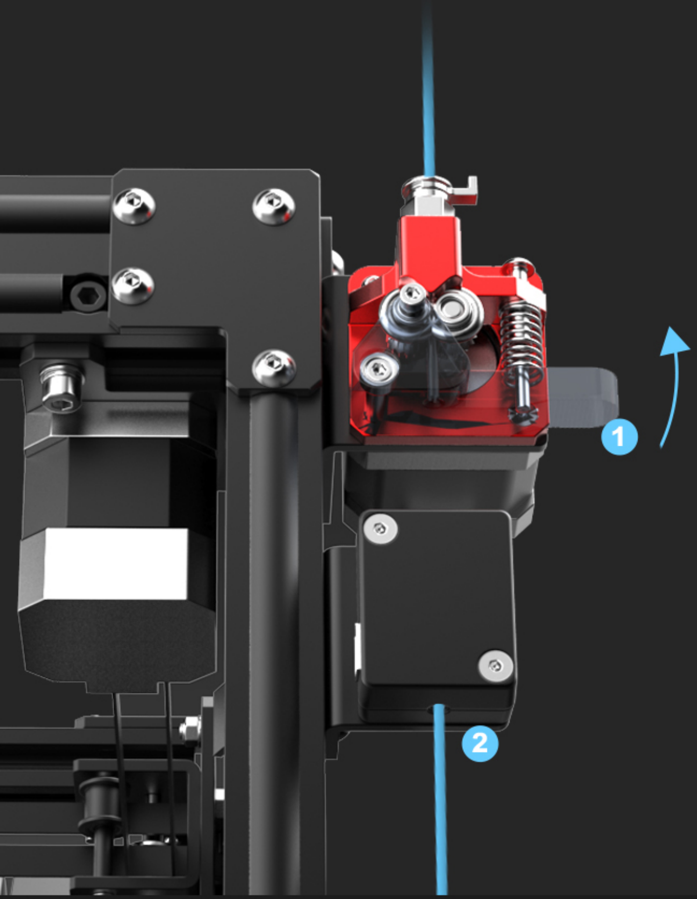

Stable Core-XY Structure

The stable and sturdy Core–XY precision structure with isosceles right triangle support gives you an extraordinary printing experience

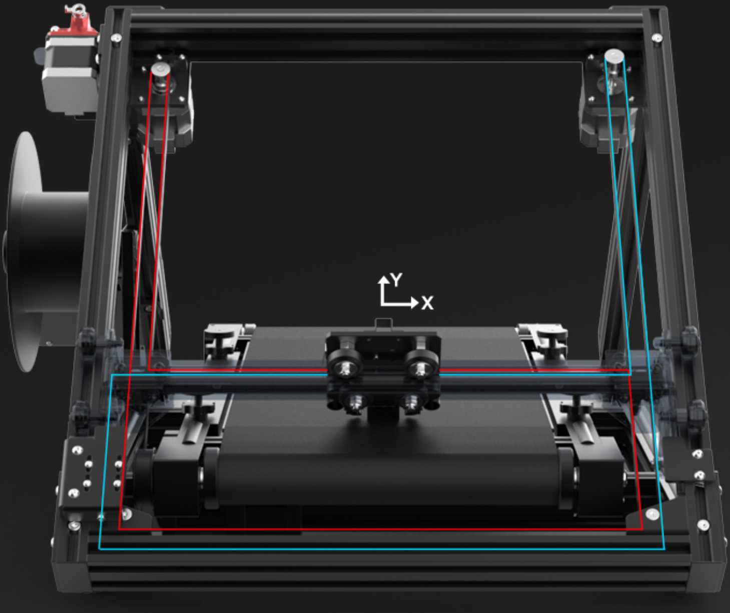

Rolling Conveyor Belt

Made of wear-resistant material, the conveyor belt features excellent adhesion to the model. The printed model can fall off automatically as the belt rolls to the end, thus free your hand

Strong adhesion

Hassle-free removal

Wear-resistant

Well-balanced conveyance

20CM
0cm
5
10
15
20
CREALITY

*Easy to replace the conveyor-belt

Exclusive Slice Software

for 3DPrintMill Only

This slicing software CrealityBelt is specially designed for 3DPrintMill. CrealityBelt is truely user–friendly ascribing to its simple operation

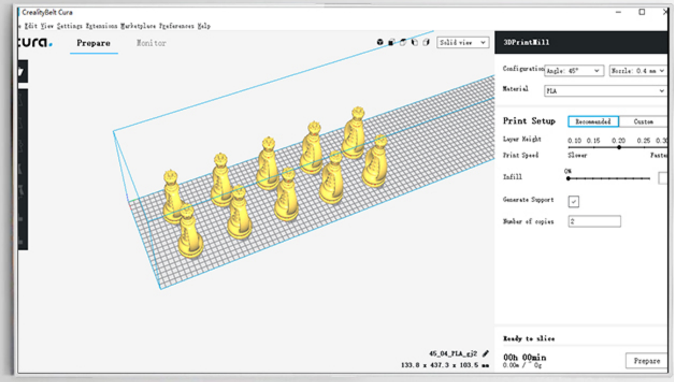

Configuration: Angle: 45° · Nozzle: 0.4 mm

Material: PLA

Layer Height: 0.10 0.15 0.20 0.25 0.30

Print Speed: Slower … Faster

Infill: 0%

Generate Support: ☑

Number of copies: 2

45_04_PLA_cj2

133.8 x 437.3 x 103.5 mm

00h 00min

0.00m / 0g

Smart Filament Breakage Detector

Whenever there is a possible accident like filament run–out or filament breakage, the smart sensor forces the machine to suspend printing. Printing will be automatically resumed after the new filament feed–in. Intelligent power protection device, resume printing and no fear of power failure

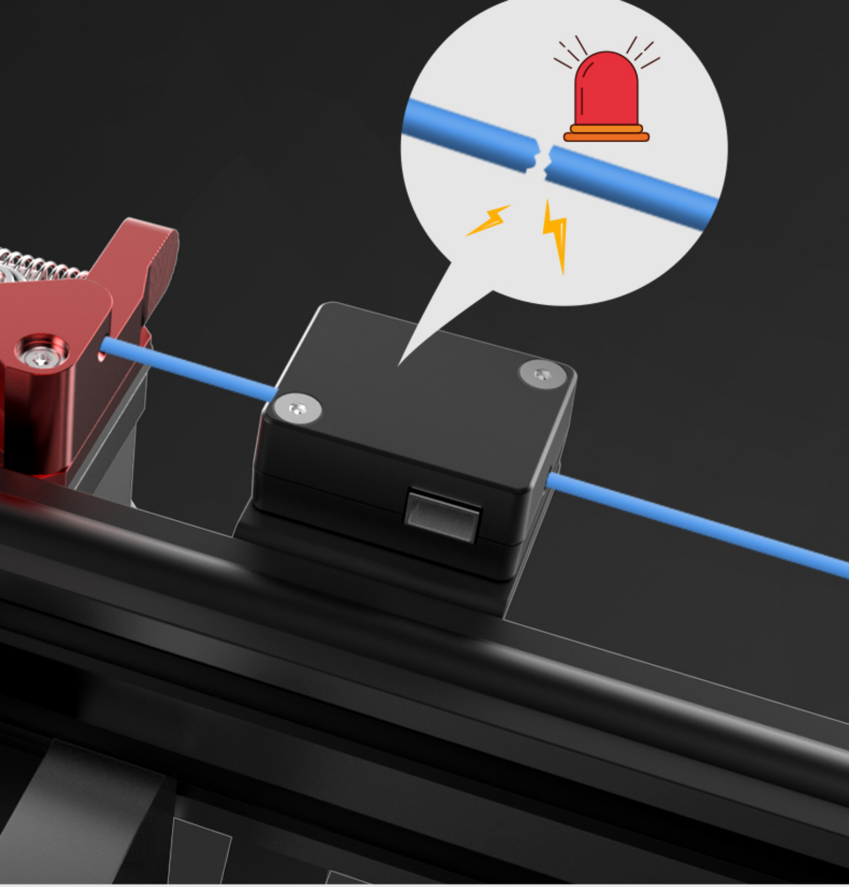

All You Need Is Within Touch

Ultra-silent Motherboard

Silent chipset and low noise enhances the user experience

High-quality Power Supply

High-quality power supply greatly enhance the stability of infinite printing.

Accessories

Spool Holder

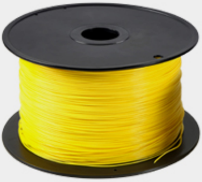

5KG Filament

Creality Smart Kit

Multi–kilogram Spool Holder

Applications

Building structure

Industrial design

CREALITY 3D
CREALITY 3D

Household life

dolls

Product parameters

Print Tech	FDM
Print Size	200*170*∞mm
Product Size	535*656*410mm
Package Size	685*565*302mm
Product Net Weight	16.5kg
Package Gross Weight	20.5kg
Slicing Software	Crealitybelt
Printing Precision	±0.1mm
Nozzle Diameter	0.4mm
Nozzle Qty	1
Hot Bed Temperature	
Nozzle Temperature	

≤ 100 ℃

≤ 240 ℃

Layer Height

0.1mm–0.4mm

Maximum Power Consumption

350W

Power Requirement

AC 100–120V / 200–240V, DC 24V

Supported Materials

PLA/TPU/PETG

Filament Diameter

1.75mm